2915 Ogletown RD # 2270
Newark, DE 19713
T.+1-866-650-6555 F. +1-888-966-6555
quotes@motioncomposites.com
orders@motioncomposites.com
www.motioncomposites.com

6.5

Helio A6

ORDER FORM - USA

1- Purchasing information

P.O. number:* Date:

Company Name:*

Purchasing contact:*

Phone:*

Email:*

Contact preference:* Phone ☐ Email ☐

Marked for:

2- ATP/Clinician information

ATP/Clinician:*

Phone:*

Email:*

Contact preference:* Phone ☐ Email ☐

3- Shipping information

Ship to:*

Name:

Address:

City: State:

Zip Code:

Phone:

** Required*

MA082 ☐ *English Manual (STD)* *MA089* ☐ *Spanish Manual* *Taxes not included*

MODEL				USD
WC19	☐	Ultralight folding Helio A6 Wheelchair - *6000 series aluminum (265lb weight capacity)*	K0005	**$2,095**
WC09	☐	**HD** Heavy duty kit *(350 lb weight capacity)* [5]		$535
Frame				
SEAT WIDTH [3]				
SW	☐	14" ☐ 15" ☐ 16" ☐ 17" ☐ 18" [1] ☐ 19" [1] ☐		NC
	☐	20" [1] ☐ 21" [2] ☐ 22" [2] ☐	E2201	$505
SEAT DEPTH				
SD	☐	14" ☐ 15" ☐ 16" ☐ 17" ☐ 18" ☐ 19" ☐		NC
	☐	20" ☐	E2203	$485
TRANSIT TIE DOWN				
AC04	☐	Transit Tie Down *(Unoccupied)*		NC
AC05-S	☐	WC-19 Transit Tie Down w/Q'straint belt [4] Short belt 20"-41"		$365
AC05-L	☐	WC-19 Transit Tie Down w/Q'straint belt [4] Long belt 20"-46"		$365
AC35	☐	WC-19 Transit Tie Down without belt [4]		$335

1- Available with HD kit; 2- Only with HD Kit (350 lb);
4- May interfere with swing away armrest and Clamp on height adjustable push handle; Not available with HD option
5- HD fee is required for clients weighing 300-350 lbs

3. Width calculator

PACKAGES				
VP01	☐	Vision Package : *Orange accent added to point of contact accessories including: footrest latches, "T" and flip back armrest button cap, 6" Push to lock extension and rubber inserts on Newton composite angle adjustable footplates* [1]	K0108	$95

1- Please select footplates, footrest, armrest, push to lock wheel lock and the extensions in the appropriate sections; To know the compatible parts, look for this logo ***VP01*** *; Recommended with black chair; See picture of the product on page 7.*

A6 FRONT Seat-to-floor Height - Please select your choice

Fork/Position		3" caster Stem bolt Length			4" caster Stem bolt length			5" caster Stem bolt length			6" caster Stem bolt length			7" caster Stem bolt length			8" caster Stem bolt length		
		STD	+1"	+2"	STD	+1"	+2"	STD	+1"	+2"	STD	+1"	+2"	STD	+1"	+2"	STD	+1"	+2"
4"	P1	12" ☐	13" ☐	14" ☐	12 1/2" ☐	13 1/2" ☐	14 1/2" ☐												
	P2	12 1/2" ☐	13 1/2" ☐	14 1/2" ☐	13" ☐	14" ☐	15" ☐	13 1/2" ☐	14 1/2" ☐	15 1/2" ☐									
5"	P1																		
	P2				13" ☐	14" ☐	15" ☐	13 1/2" ☐	14 1/2" ☐	15 1/2" ☐									
	P3	13" ☐	14" ☐	15" ☐	13 1/2" ☐	14 1/2" ☐	15 1/2" ☐	14" ☐	15" ☐	16" ☐	14 1/2" ☐	15 1/2" ☐	16 1/2" ☐						
	P4	13 1/2" ☐	14 1/2" ☐	15 1/2" ☐	14" ☐	15" ☐	16" ☐	14 1/2" ☐	15 1/2" ☐	16 1/2" ☐	15" ☐	16" ☐	17" ☐	15 1/2" ☐	16 1/2" ☐	17 1/2" ☐			
7"	P1										15 1/2" ☐	16 1/2" ☐	17 1/2" ☐	16" ☐	17" ☐	18" ☐			
	P2							15 1/2" ☐	16 1/2" ☐	17 1/2" ☐	16" ☐	17" ☐	18" ☐	16 1/2" ☐	17 1/2" ☐	18 1/2" ☐			
	P3							16" ☐	17" ☐	18" ☐	16 1/2" ☐	17 1/2" ☐	18 1/2" ☐	17" ☐	18" ☐	19" ☐	17 1/2" ☐	18 1/2" ☐	19 1/2" ☐
	P4	15 1/2" ☐	16 1/2" ☐	17 1/2" ☐	16" ☐	17" ☐	18" ☐	16 1/2" ☐	17 1/2" ☐	18 1/2" ☐	17" ☐	18" ☐	19" ☐	17 1/2" ☐	18 1/2" ☐	19 1/2" ☐	18" ☐	19" ☐	20" ☐
	P5	16" ☐	17" ☐	18" ☐	16 1/2" ☐	17 1/2" ☐	18 1/2" ☐	17" ☐	18" ☐	19" ☐	17 1/2" ☐	18 1/2" ☐	19 1/2" ☐	18" ☐	19" ☐	20" ☐	18 1/2" ☐	19 1/2" ☐	20 1/2" ☐
Froglegs	P1				13 1/2 ☐	14 1/2 ☐	15 1/2 ☐												
	P2	13 1/2 ☐	14 1/2 ☐	15 1/2 ☐	14 ☐	15 ☐	16 ☐	14 1/2 ☐	15 1/2 ☐	16 1/2 ☐									
	P3	14 ☐	15 ☐	16 ☐	14 1/2 ☐	15 1/2 ☐	16 1/2 ☐	15 ☐	16 ☐	17 ☐	15 1/2 ☐	16 1/2 ☐	17 1/2 ☐						

Height available +- 1/4" (see stem bolt and fork combination at the end of the order form)

CASTERS				Availability		
CA01-03 to CA01-08	☐	Composite wheel w/ PU tire (1")		3", 4", 5", 6", 7", 8"		NC
CA10 to CA11	☐	Pneumatic casters (1 ¼")		6", 8"	E2214/E2215	$165
CA14 to CA16	☐	Newton UltraCaster Composite (1 ½ ")		4", 5", 6"		$95
CA17 to CA19	☐	Newton UltraCaster Aluminum (1 ½ ")		4", 5", 6"		$215
CASTER OPTIONS						
CA12	☐	Caster Pin Locks *(Available with +1" or +2" Stem bolt ONLY)* [1]			K0073	$300
CA13	☐	Carbon fiber Frog Legs suspension forks (Not available with caster pin locks)			E1015	$490

***1-** Not available with WC-19*

Helio A6 - REAR Seat-to-floor Height - Please select your choice

20" (451)	22" (501)	24" (540)	25" (559)	26" (590)
12" ☐	13" ☐	13 3/4" [1] ☐	14 1/4" ☐	14 3/4" ☐
12 1/2" ☐	13 1/2" ☐	14 1/4" ☐	14 3/4" ☐	15 1/4" ☐
13" ☐	14" ☐	14 3/4" ☐	15 1/4" ☐	15 3/4" ☐
13 1/2" ☐	14 1/2" ☐	15 1/4" ☐	15 3/4" ☐	16 1/4" ☐
14" ☐	15" ☐	15 3/4" ☐	16 1/4" ☐	16 3/4" ☐
14 1/2" ☐	15 1/2" ☐	16 1/4" ☐	16 3/4" ☐	17 1/4" ☐
15" ☐	16" ☐	16 3/4" ☐	17 1/4" ☐	17 3/4" ☐
15 1/2" ☐	16 1/2" ☐	17 1/4" ☐	17 3/4" ☐	18 1/4" ☐
16" ☐	17" ☐	17 3/4" ☐	18 1/4" ☐	18 3/4" ☐
16 1/2" ☐	17 1/2" ☐	18 1/4" ☐	18 3/4" ☐	19 1/4" ☐
17" ☐	18" ☐	18 3/4" ☐	19 1/4" ☐	19 3/4" ☐
17 1/2" ☐	18 1/2" ☐	19 1/4" [1] ☐	19 3/4" ☐	20 1/4" ☐

Configuration used: 1" seat slope with a center of gravity at 2" ***1-** Not available with One Arm Drive*

Note: Tire size, center of gravity setting and seat slope may result in a variation of +/- ½" of selected seat to floor height"

Footrest

SWING-IN/SWING-OUT FOOTREST						
FR03-01	☐	60° Swing-in/swing-out footrest - 13.5" - 17"		Set at*:		NC
FR03-02	☐	60° Swing-in/swing-out footrest - 14.5" - 19.5"		Set at*:		NC
FR03-03	☐	60° Swing-in/swing-out footrest - 15.5" - 20.5"		Set at*:		NC
FR04-01	☐	70° Swing-in/swing-out footrest - 13.5" - 17"		Set at*:		NC
FR04-02	☐	70° Swing-in/swing-out footrest - 14.5" - 19.5"		Set at*:		NC
FR04-03	☐	70° Swing-in/swing-out footrest - 15.5" - 20.5"		Set at*:		NC
FR15-01	☐	80° Swing-in/swing-out footrest - 13.5" - 16" [5]		Set at*:		NC
FR15-02	☐	80° Swing-in/swing-out footrest - 14.5" - 19.5" [5]		Set at*:		NC
FR15-03	☐	80° Swing-in/swing-out footrest - 15.5" - 20.5" [5]		Set at*:		NC
FR06	☐	90° swing-in/swing-out with front mount - Standard (no extension) [1]	*7.5" - 11"*	Set at*:		NC
FR07	☐	90° swing-in/swing-out with front mount - Short extension 2" [1, 2]	*9.5"- 13"*	Set at*:		NC
FR08	☐	90° swing-in/swing-out with front mount - Medium extension 4" [1, 2]	*9.5" - 14.5"*	Set at*:		NC
FOOTREST OPTIONS						
FR09	☐	High mount *(footplate attached to the hanger with clamps)* [3]	*5" - 13.5"*	Set at*:		$85
FR10	☐	Elevating legrest with calf pad, Length adjustable [4] Left ☐ Right ☐	*14" - 22"*	Set at:	E0990	$245
FR99	☐	Omit Footrest				NC

1- *Available only with two pieces adjustable footplate;* ***2-*** *May interfere with front casters;* ***3-*** *Not available with front mount and the elevating legrest;* ****** *+/- 1/2"*

4- *The elevating legrest replace the footrest side selected; Not available with one piece footplate;* ***5-*** *Not available with 8" caster*

FOOTPLATES						
FP01	☐	Standard - Composite[1]				STD
FP02	☐	Newton adjustable angle - Composite *VP01			K0040	$215
FP03	☐	Newton adjustable angle - Aluminum			K0040	$235
FP23	☐	Newton adjustable angle extra deep - Aluminum			K0040	$235
FP06	☐	One piece adjustable angle flip-up - Aluminum			K0040	$195
FOOTPLATE ACCESSORIES						
FP08	☐	Length adjustable heel loop [2]			E0951	$41
FP09	☐	Calf strap			K0038	$36
FP30	☐	Bodypoint Aeromesh Padded calf strap			K0038	$118

1- *Not available with front mount;* ***2-*** *not available with one piece footplate*

SWING AWAY RESIDUAL LIMB SUPPORT						
FR27	☐	Residual limb support - flat 6"x8"	Left ☐	Right ☐	E1020	$420
FR28	☐	Residual limb support - flat 8"x10"	Left ☐	Right ☐	E1020	$420
FR29	☐	Residual limb support - flat 10"x10"	Left ☐	Right ☐	E1020	$420
FR30	☐	Residual limb support - flat 10"x14"	Left ☐	Right ☐	E1020	$420
FR32	☐	Residual limb support - contour 6"x8"	Left ☐	Right ☐	E1020	$420
FR33	☐	Residual limb support - contour 8"x10"	Left ☐	Right ☐	E1020	$420

Backrest

FIXED ANGLE BACK CANES WITH INTEGRATED PUSH HANDLE *(push handle included - no further selection needed)*							
BC58-915	☐	Straight aluminum back cane	9" - 15"	*increment of 1/2"*	Set at [2]:		NC
BC58-1521	☐	Straight aluminum back cane	15" - 21"	*increment of 1/2"*	Set at [2]:		NC
BC60	☐	Straight aluminum back cane	21" - 24"	*increment of 1"*	Set at [2]:		$77
BC01-16	☐	8° bend aluminum back cane	16"				NC
BC01-18	☐	8° bend aluminum back cane	18"				NC
BC01-20	☐	8° bend aluminum back cane	20"				NC
BC59	☐	8° bend aluminum back cane	21" - 24"	*increment of 1"*	Set at [2]:		$77
FIXED ANGLE, HEIGHT ADJUSTABLE BACK CANES WITH PUSH HANDLE OPTIONS *(MUST select ONE push handle options)*							
BC11-912	☐	Straight aluminum back cane	9" - 12"	*increment of 1/2"*	Set at [2]:		NC
BC11-1215	☐	Straight aluminum back cane	12" - 15"	*increment of 1/2"*	Set at [2]:		NC
BC11-1518	☐	Straight aluminum back cane	15" - 18"	*increment of 1/2"*	Set at [2]:		NC
BC11-1821	☐	Straight aluminum back cane	18" - 21"	*increment of 1/2"*	Set at [2]:		NC
BC12-1315	☐	8° bend aluminum back cane	13.5" - 15"	*increment of 1/2"*	Set at [2]:		$60
BC12-1518	☐	8° bend aluminum back cane	15" - 18"	*increment of 1/2"*	Set at [2]:		$60
BC12-1821	☐	8° bend aluminum back cane	18" - 21"	*increment of 1/2"*	Set at [2]:		$60
ANGLE AND HEIGHT ADJUSTABLE BACK CANE WITH PUSH HANDLE OPTIONS *(MUST select ONE push handle options)*							
BC13-1518	☐	Straight aluminum back cane	15" - 18"	*increment of 1/2"*	Set at [2]:		$215
BC13-1821	☐	Straight aluminum back cane	18" - 21"	*increment of 1/2"*	Set at [2]:		$215
BC14-1518	☐	8° bend aluminum back cane	15" - 18"	*increment of 1/2"*	Set at [2]:		$270
BC14-1821	☐	8° bend aluminum back cane	18" - 21"	*increment of 1/2"*	Set at [2]:		$270
		Select back cane angle:	85° [1] ☐	90° **STD** ☐	95° ☐	100° ☐	105° ☐ 110° ☐
PUSH HANDLES OPTIONS *(ONE option at a time)*							
PH01	☐	Push handles					STD
PH05	☐	Fold down push handles [3, 5]					$145
PH06-920	☐	Clamp on height adjustable push handles 9"-20" [3,4, 5]					$325
PH06-923	☐	Clamp on height adjustable push handles 9"-23" [3,4, 5]					$325
PH02	☐	Omit push handles					NC
STROLLER HANDLE AND STABILIZER BAR *(only available with push handle)*							
PH04	☐	Stroller handle *(not available with the HD option)*				K0108	$165
PH03	☐	Newton folding stabilizer bar *(not available with stroller handle)*					$270

1 - Not compatible with 8 degree bend back cane *2 - If not indicated, default height setting is at the lowest position - measured from seat sling to top of back upholstery;* *3 - 265 lb weight limit*
4 - Not compatible with swing away armrests, 8° bend back canes, 21-24" back canes and amputee axle plates; 5 - Not compatible with stroller handle, stabilizer bar, headrest and attendant lock

BACK UPHOLSTERY					
BH05	☐	Slip-on Nylon back upholstery			STD
BH06	☐	Adjustable tension Nylon back upholstery		E2611/E2612	$305
BH99	☐	Omit Back upholstery			NC
	☐	NXT back Support		See price list	
SEAT CUSHION					
SC01	☐	2" Cushion			$170
SC02	☐	3" Cushion		E2601/E2602	$190
SC99	☐	Omit seat cushion			STD
	☐	NXT cushion		See price list	

Rear wheels

ONE ARM DRIVE [1]		*Only available with Newton One rear wheels permanent axles, 0° camber*			
HR22	☐	One arm drive - aluminum inner handrim [2] Left ☐ Right ☐		E0958	$1,495
HR60	☐	One arm drive - plastic coated inner handrim [2] Left ☐ Right ☐		E0958	$1,600
HR98	☐	Omit handrim on opposite side of the One Arm Drive (OAD)			NC
REAR WHEELS			Available		
RW01	☐	Mag [3]	20", 22" 24"		$57
RW02	☐	Newton One - spoke wheel [4]	20", 22" 24"		NC
RW03	☐	Newton Gravity - ultralight wheel	20", 22", 24", 25", 26"		$360
RW04	☐	Spinergy Spox **Blk STD** ☐ Wht [5] ☐ Blue [5] ☐ Red [5] ☐ Yel [5] ☐	22", 24", 25", 26"		$915
RW05	☐	Spinergy LX **Blk STD** ☐ Pur [5] ☐ Wht [5] ☐ Blue [5] ☐ Red [5] ☐ Yel [5] ☐ Pink [5] ☐ Grn [5] ☐ Org [5] ☐	22", 24", 25", 26"		$1,145
RW07	☐	Spinergy CLX [6] **Blk STD** ☐ Pur [5] ☐ Wht [5] ☐ Blue [5] ☐ Red [5] ☐ Yel [5] ☐ Pink [5] ☐ Grn [5] ☐ Org [5] ☐	24", 25"		$1,625
TIRES			Available		
		AIRLESS			
TI01	☐	Soft Urethane 1 3/8" - Low Tread, black	20", 22" 24"	E2218	STD
TI02	☐	Soft Urethane 1 3/8 " - Medium Tread, black [7]	22", 24", 25", 26"	E2218	$97
TI04	☐	Soft Urethane 1" - No tread, black - *Shox*	22", 24", 25", 26"	E2218	$118
TI08	☐	Pneumatic Airless insert 1 3/8" - Medium Tread [8]	22", 24", 26"	E2211/E2213	$82
		PNEUMATICS			
TI05	☐	Pneumatic 1 3/8" - Medium Tread	20", 22", 24", 25"' 26"	E2211/E2212	NC
TI06	☐	Pneumatic HP 1" - Low Tread, Puncture resistant, black - *SpeedLite*	20", 22", 24", 25", 26"	E2211/E2212	$105
TI07	☐	Pneumatic HP 1" - Medium Tread, Puncture resistant, black - *TrailBlazer*	24", 25", 26"	E2211/E2212	$150
TI03	☐	Pneumatic 2" - Large Tread, black [9]	22", 24", 25"	E2211/E2212	$115

1- *Offered with handrims on each side of the wheelchair; select the outer handrim in the handrims section; Only available with 24" wheel size; Not available with 21" and 22" wide;*
2- *Only standard handrim position available;* ***3-*** *Not compatible with HP tires ; Only available with aluminum or plastic coated handrim, standard position;* ***4-*** *Not compatible with Shox tires;*
5- *color spokes require an additionnal 10 days lead-time;* ***6-*** *Only available with 1" tires;* ***7-*** *22" is only available with Mags and Newton One rear wheels;*
8- *Not available with Spinergy CLX, Spinergy LX 25", 26" and Spox 25", 26" rear wheels;* ***9-*** *Not available with armrests when 3° camber is selected.*

Handrims

HANDRIM			Available		
HR01	☐	Aluminum anodized	20", 22", 24", 25", 26"		STD
HR61	☐	Aluminum black hard anodized [2]	20", 22", 24", 25"		$75
HR02	☐	Plastic coated [1]	20", 22", 24", 25", 26"		$110
HR03	☐	High friction coated [1,2, 3]	22", 24", 25", 26"		$375
HR07-HR18 and HR65-HR71	☐	Newton Air Grip [2] *See page 6 for the color selection and price*	20", 22", 24", 25", 26"		
HR28	☐	Surge [1,2,3] *(1 1/2" Oval handrim w/ Gripton high friction strip)*	22", 24", 25", 26"		$450
HR05	☐	Surge LT [1,2,3] *(1 1/8" Oval handrim w/ Gripton high friction strip)*	22", 24", 25", 26"		$495
HR04	☐	Natural Fit [1,2,3]	22", 24", 25", 26"		$395
HR62	☐	Simi H [1,2,3] *(1 3/8" Oval handrim with high friction strip)*	22", 24", 25", 26"		$395
HR63	☐	Nova H [1,2,3] *(1 1/4" Oval handrim with high friction strip)*	22", 24", 25", 26"		$445
HR64	☐	Optimum H [1,2,3] *(1 1/8" heart-shaped handrim)*	22", 24", 25", 26"		$345
HR99	☐	Omit handrim			NC

1- *Only standard and narrow handrim position. By default, the tab won't be cut with the narrow position;* ***2-*** *Not available with Mag wheels;* ***3*** *- Not available with one arm drive;*

Handrims option

ASSEMBLY POSITION					
HR29	☐	Standard Handrim position *Full tab*			STD
HR030	☐	Narrow Handrim position no cut *Full tab*			NC
HR30	☐	Narrow Handrim position with cut [3] *Short tab 2 positions*			$30
HR31	☐	Super Narrow Handrim [3] *Short tab 2 positions STD* ☐ *Short tab 1 position* ☐			$30
THUMB PIECE SELECTION FOR NATURAL FIT, SURGE, SURGE LT HANDRIMS					
HR23	☐	Standard grip			$95
HR27	☐	Super grip			$150
HR099	☐	Omit thumb piece			NC

3- *Only available with Aluminum and Air Grip handrims;*

AXLE [1]					
AX01	☐	Quick release axle			STD
AX02	☐	Permanent axle			NC
AX03	☐	Quad release axle		K0108	$130
AXLE PLATE					
AX04	☐	Amputee adjustable axle plate [2]		E0959	$205

1- *Not required with one arm drive;* ***2*** *- May interfere with swing away armrest and limit seat to floor height; Not available with WC-19 transit tie down*

REAR WHEEL CAMBER					
CM00	☐	0° camber			STD
CM03	☐	3° camber			NC

CENTER OF GRAVITY

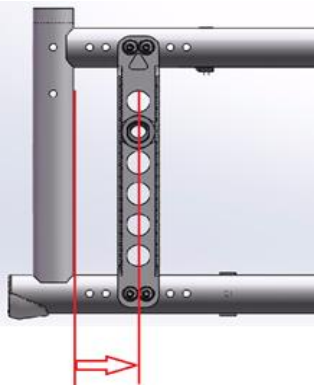

Choose position of rear wheel axle plate:

Measure distance from front of back post to center of axle receiver.

Default setting is at 1'' 1/4"

Most stable					Most responsive
AMPUTEE [1]	3/4"	1" 1/4	1" 3/4	2'' 1/4	2" 3/4
☐	☐	☐	☐	☐	☐

Motion Composites will select the closest possible center of gravity (COG) if an issue arises with the COG

1- Only available with amputee axle plate

WHEEL LOCK							
WL08	☐	Newton Wheel lock - push to lock					STD
WL16	☐	Aluminum push to lock **with** extensions				E0961	$77
WL02	☐	Pull to lock					NC
WL04	☐	Newton grade aid push to lock *(works best with pneumatic or high pressure tire)*				E0974	$155
WL13 WL14	☐	6" removable extension handle [1] *VP01				E0961	$77
WL05	☐	Scissors Lock					$155
WL06	☐	Attendant Lock *(additional set of wheel lock mounted to the back)*					$215
WL15	☐	Unilateral wheel lock - pull to lock[2]	Left ☐	Right ☐			$330
WL99	☐	Omit wheel locks					NC

1- Only available with Newton push to lock (WL08), pull to lock (WL02) and Newton Grade aid (WL04); Only the extension for the Newton push to lock is available with the vision package (VP01)

2- For more information about incompatibilties and restriction, refer to the table at page 7 and the "How-to documents" page of our website:
https://www.motioncomposites.com/en_ca/support-and-education/how-to-documents

Armrests

HEIGHT ADJUSTABLE FLIP BACK ARMREST *(Convertible to "T" armrest)* [1,4] *VP01								
AR01-812	☐	10" Desk length armpad	8" - 12"	Locked ☐	Unlocked STD ☐		E0973	$355
AR01-1014	☐	10" Desk length armpad	10" - 14"	Locked ☐	Unlocked STD ☐		E0973	$355
AR02-812	☐	14" Full length armpad	8" - 12"	Locked ☐	Unlocked STD ☐		E0973	$355
AR02-1014	☐	14" Full length armpad	10" - 14"	Locked ☐	Unlocked STD ☐		E0973	$355
HEIGHT ADJUSTABLE "T" ARMREST [1] *VP01								
AR13-610	☐	10" Desk length armpad [5]	6" - 10"				E0973	$330
AR13-812	☐	10" Desk length armpad	8" - 12"				E0973	$330
AR13-1014	☐	10" Desk length armpad	10" - 14"				E0973	$330
AR14-610	☐	14" Full length armpad [5]	6" - 10"				E0973	$330
AR14-812	☐	14" Full length armpad	8" - 12"				E0973	$330
AR14-1014	☐	14" Full length armpad	10" - 14"				E0973	$330
SWING AWAY ARMREST [2]								
AR05	☐	Tubular armrest **without** plastic side guards - Short pad	8" - 11"				E0973	$230
AR19	☐	Tubular armrest **with** plastic side guards - Short pad	8" - 11"				E0973	$395
AR23	☐	Tubular armrest **without** plastic side guards - Long pad	8" - 11"				E0973	$230
AR24	☐	Tubular armrest **with** plastic side guards - Long pad	8" - 11"				E0973	$395
AR06	☐	10" Desk length flat armpad **without** plastic side guards	8" - 11"				E0973	$230
AR20	☐	10" Desk length flat armpad **with** plastic side guards	8" - 11"				E0973	$395
AR17	☐	14" Full length flat armpad **without** plastic side guards	8" - 11"				E0973	$230
AR21	☐	14" Full length flat armpad **with** plastic side guards	8" - 11"				E0973	$395
ARMREST OPTION								
AR12	☐	14'' Full Length armpad - Gel Ovation (pair) [3]						$165
AR99	☐	Omit armrest						NC

***1-** May have 1/2" adjustment restriction on both limits of the range; **2-** Could interfere with some rigid backrests; Not available with attendant lock and fixed carbon fiber side guards;*

***3-** Only available with full length armrest; Not available with swing away and desk lenght armrests; **4-** Not available with attendant lock; **5-** May have some restriction with seat-to-floor height and rear wheel*

SIDE GUARDS *(not available with Flip Back and "T" Armrest)*							
SG01	☐	Plastic side guards *(removable)*	Straight bracket - STD ☐	Offset bracket[1] ☐		K0108	$200
SG02	☐	Carbon fiber side guards *(fixed)*					$270
SG03	☐	Carbon fiber side guards *(removable)*	Straight bracket - STD ☐	Offset bracket[1] ☐		K0108	$305
SG06	☐	Plastic fender side guards *(removable)*	Straight bracket - STD ☐	Offset bracket[1] ☐			$290
SG04	☐	Carbon fiber fender side guards *(removable)*	Straight bracket - STD ☐	Offset bracket[1] ☐		K0108	$550
SG99	☐	Omit side guard					NC
SIDE GUARDS OPTION							
SG07	☐	Side guards clip *(pair)* [2]					NC

***1-** only compatible with 0° camber;Increase width by 1/2" per side for a total of 1" ; **2-** Not available with fixed carbon fiber side guard*

POSITIONING BELT					
SB01-S	☐	Velcro adjustable - **Small 35"** [1]		E0978	$46
SB01-L	☐	Velcro adjustable - **Long 60"**		E0978	$46
SB02-S	☐	Auto buckle - **Small 35"** [1]		E0978	$87
SB02-M	☐	Auto buckle - **Medium 48"**		E0978	$87
SB02-L	☐	Auto buckle - **Long 60"**		E0978	$87
SB04-M	☐	BodyPoint Hip Belt - 2 point not padded - **Medium 56"**		E0978	$85
SB04-L	☐	BodyPoint Hip Belt - 2 point not padded - **Long 61"**		E0978	$85
SB05-S	☐	BodyPoint Hip Belt - 2 point padded - **Small 51"**		E0978	$180
SB05-M	☐	BodyPoint Hip Belt - 2 point padded - **Medium 56"**		E0978	$180
SB05-L	☐	BodyPoint Hip Belt - 2 point padded - **Long 61"**		E0978	$180
SB06-S	☐	BodyPoint Hip Belt - 4 point padded - **Small 51"**		E0978	$195
SB06-M	☐	BodyPoint Hip Belt - 4 point padded - **Medium 56"**		E0978	$195
SB06-L	☐	BodyPoint Hip Belt - 4 point padded - **Long 61"**		E0978	$195
SB03	☐	Hardware attachment for 2 extra points (1 pair)			$17
SB08-M	☐	BodyPoint EVOFLEX® Positioning Belt Rehab latch and Band Clamps - **Medium 18"**		K0108	$305
SB08-L	☐	BodyPoint EVOFLEX® Positioning Belt Rehab latch and Band Clamps - **Long 24"**		K0108	$305
SB99	☐	Omit positioning belt			STD

1- Not recommended for seat width of 18" and more

HEADREST					
AC01-S	☐	Profiled Headrest - **Small (3.5"X6")**		E0955	$185
AC01-M	☐	Profiled Headrest - **Medium (4.5"X7")**		E0955	$185
AC01-L	☐	Profiled Headrest - **Large (5.5"X8")**		E0955	$185
AC28	☐	Headrest mounting hardware with removable non folding stabilizer bar [1]		E1028	$300

***1-** Only available with push handles - Not available with a stroller handle or a folding stabilizer bar*

ACCESSORIES					
AC03	☐	Anti-tippers		E0971	$145
AC29	☐	Swing-away anti-tipper[1] Left ☐ Right ☐			$190
AC27	☐	Tip assist [2]			$67
AC06	☐	Cane and crutch holder Left ☐ Right ☐		E2207	$200
AC07	☐	Oxygen tank holder [4] - D and E Type - *Installed to the left*		E2208	$315
AC08	☐	Spoke guards [3] Available: 20", 22", 24", 26"		K0065	$118
AC09	☐	Footrest neoprene impact guard *(pair)* - Black		K0108	$92
AC10	☐	Seat pouch			$82
AC30	☐	Newton multi-purpose pouch			$61
AC26	☐	BodyPoint Mobility Bag			$135
AC23	☐	Newton Backpack			$130
AC12	☐	Velcro Closing Strap			$57
AC13	☐	Tool kit			$51
AC16	☐	Motion Composites Polo Shirt W/S ☐ W/M ☐ W/L ☐ M/S ☐ M/M ☐ M/L ☐ M/XL ☐ M/XXL ☐ M/XXXL ☐			$36
AC15	☐	Military Patches Army ☐ Navy ☐ Air Force ☐ Marines ☐ Coast Guard ☐ Combat Wounded Purple Heart ☐ Space Force ☐ American Flag ☐			$96

***1-** Must select the pair (left and right) with HD option; Only available with rear seat to floor height between 13 1/2" and 19 3/4"* ***2-** Cannot be combined with Anti Tippers*

***3-** Not available with Mag wheels and Spinergy;* ***4-** Not compatible with swing away armrest, amputee axle plate and WC-19 transit tie-down*

Colors

Options [1]	Black	Sunkissed Orange	Burgundy	Sapphire Blue	Monster Green	Charcoal	Fuchsia	Steel Blue	Ferrari Red	Acid Green	Electric Purple	Caribbean Blue	White	Pink Pearl	Plum Purple	Sky Blue	Black Cherry	Khaki Green (matte)	Desert Sand (matte)	
AirGrip	☐ $110	☐	☐	☐	☐	☐	☐	☐	☐	☐	☐	☐	☐	☐	☐	☐	☐	☐	☐	$265
Frame [2]	☐ STD	☐	☐	☐	☐	☐	☐	☐	☐	☐	☐	☐	☐	☐	☐	☐	☐	☐	☐	NC
FC99	☐	Custom Color	Specify PPG Paintit color:														*additional 10 days lead-time*			$390

***1-** Color representation may vary from one monitor to another. Therefore, the actual paint color on your wheelchair might differ slightly from what you see on your screen.; Finish between Airgrip and frame might be different;*

***2-** with black hydroformed aluminum crossbrace*

Fork and Stem bolt combinations

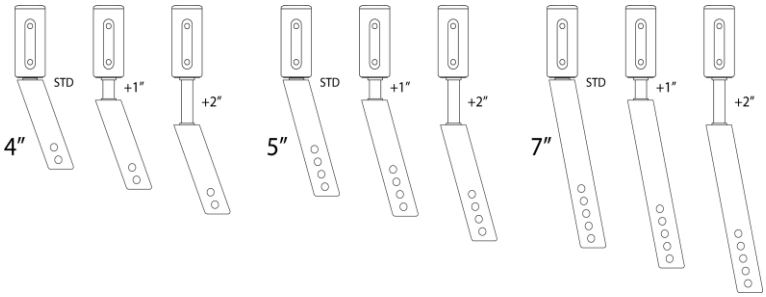

Vision Package Accents

Unilateral wheel lock restrictions

Seat depth: shall be 16 in and greater		
Rear wheel: shall be 24 in and less		
"T" or flip-back armrest only compatible with 0° Camber		
One arm drive: Not compatible with "T" or flip-back armrest		
"T" or flip-back armrest may require to move the rear wheels outwards		
Not compatible with wheel lock lever extension		
Rear wheel diameter	Seat depth (in)	COG Compatibility Range (in)
20 in	16+	1.25 to 2.75
22 in	16	0.75 to 2.25
	17+	0.75 to 2.75
24 in	16	0.75 to 1.75
	17	0.75 to 2.25
	18+	0.75 to 2.75

Notes :

FOLDING ON CHAIR – USA ORDER FORM

BioFit™ CUSHION

NXCABF__ __ X __ __
(W" x D")

HCPCS CODE: E2607-E2608

DEPTH \ WIDTH	12"	13"	14"	15"	16"	17"	18"	19"	20"	21"	22"
12"	☐ $445	☐ $445	☐ $445								
14"	☐ $445	☐ $445	☐ $445								
15"		☐ $445	☐ $445	☐ $445	☐ $445						
16"		☐ $445	☐ $445	☐ $445	☐ $445	☐ $445	☐ $445	☐ $480	☐ $480	☐ $480	☐ $480
17"				☐ $445	☐ $445	☐ $445	☐ $445	☐ $480	☐ $480		
18"				☐ $445	☐ $445	☐ $445	☐ $445	☐ $480	☐ $480	☐ $480	☐ $480
19"				☐ $445	☐ $445	☐ $445	☐ $445	☐ $480	☐ $480		
20"				☐ $445	☐ $445	☐ $445	☐ $480	☐ $480	☐ $480	☐ $480	☐ $480
Option: Change cover for incontinent/infection control outer cover											☐ N/C

SEATING AND CUSHION ACCESSORIES

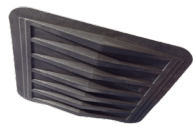

MODEL NO.	Description	Fits Back Width	$	QTY
RSSI 1600	Solid Seat Insert	Fits cushions 16" & 17" wide (40.6 & 43.2 cm) and 14"-18" deep (35.6-45.7 cm)	80	
RSSI 1800	Solid Seat Insert	Fits cushions 18" & 19" wide (45.7 & 48.3 cm) and 14"-18" deep (35.6-45.7 cm)	80	
RSSI 2000	Solid Seat Insert	Fits cushions 20"-22" wide (50.8-55.9 cm) and 18"-20" deep (45.7-50.8 cm)	80	

THORACIC SHAPE

Optima™
THORACIC BACK SUPPORT
CARBON FIBER SHELL (WEIGHT SAVINGS – 1lb)

HCPCS CODE: E2620-E2621

WIDTH	HEIGHT	MODEL # CARBON FIBER	$ CARBON	MODEL # ALUMINUM	$ ALUMINUM
14"	13"	NOCFACB1413	☐ $925	NOACB1413	☐ $695
14"	16"	NOCFACB1416	☐ $960	NOACB1416	☐ $695
15"	13"	NOCFACB1513	☐ $925	NOACB1513	☐ $695
15"	16"	NOCFACB1516	☐ $960	NOACB1516	☐ $695
16"	13"	NOCFACB1613	☐ $925	NOACB1613	☐ $695
16"	16"	NOCFACB1616	☐ $960	NOACB1616	☐ $695
16"	19"			NOACB1619	☐ $695
17"	13"	NOCFACB1713	☐ $925	NOACB1713	☐ $695
17"	16"	NOCFACB1716	☐ $960	NOACB1716	☐ $695
18"	13"	NOCFACB1813	☐ $925	NOACB1813	☐ $695
18"	16"	NOCFACB1816	☐ $960	NOACB1816	☐ $695
18"	19"			NOACB1819	☐ $695
19"	16"			NOACB1916	☐ $695
19"	19"			NOACB1919	☐ $695
20"	13"	NOCFACB2013	☐ $925	NOACB2013	☐ $695
20"	16"	NOCFACB2016	☐ $960	NOACB2016	☐ $695
20"	19"			NOACB2019	☐ $695
21"	16"			NOACB2116	☐ $745
21"	19"			NOACB2119	☐ $745
22"	13"			NOACB2213	☐ $745
22"	16"			NOACB2216	☐ $745
22"	19"			NOACB2219	☐ $745

ITEM	WIDTH X DEPTH	$	QTY
Replacement Cover & Foam	NOACC __ __ X __ __	130	

Optima™ DEEP
THORACIC BACK SUPPORT
CARBON FIBER SHELL (WEIGHT SAVINGS – 1lb)

HCPCS CODE: E2620-E2621

WIDTH	HEIGHT	MODEL # CARBON FIBER	$ CARBON	MODEL # ALUMINUM	$ ALUMINUM
14"	13"	NOCFPCB1413	☐ $1015	NOPCB1413	☐ $695
14"	16"	NOCFPCB1416	☐ $1055	NOPCB1416	☐ $695
15"	13"	NOCFPCB1513	☐ $1015	NOPCB1513	☐ $695
15"	16"	NOCFPCB1516	☐ $1055	NOPCB1516	☐ $695
16"	13"	NOCFPCB1613	☐ $1015	NOPCB1613	☐ $695
16"	16"	NOCFPCB1616	☐ $1055	NOPCB1616	☐ $695
16"	19"			NOPCB1619	☐ $695
17"	13"	NOCFPCB1713	☐ $1015	NOPCB1713	☐ $695
17"	16"	NOCFPCB1716	☐ $1055	NOPCB1716	☐ $695
18"	13"	NOCFPCB1813	☐ $1015	NOPCB1813	☐ $695
18"	16"	NOCFPCB1816	☐ $1055	NOPCB1816	☐ $695
18"	19"			NOPCB1819	☐ $695
19"	16"			NOPCB1916	☐ $695
19"	19"			NOPCB1919	☐ $695
20"	13"	NOCFPCB2013	☐ $1015	NOPCB2013	☐ $695
20"	16"	NOCFPCB2016	☐ $1055	NOPCB2016	☐ $695
20"	19"			NOPCB2019	☐ $695
21"	16"			NOPCB2116	☐ $745
21"	19"			NOPCB2119	☐ $745
22"	13"			NOPCB2213	☐ $745
22"	16"			NOPCB2216	☐ $745
22"	19"			NOPCB2219	☐ $745

ITEM	WIDTH X DEPTH	$	QTY
Replacement Cover & Foam	NOPCC __ __ X __ __	130	

PLEASE NOTE: Each back will fit widths up to 2" wider.

ALL PRICES QUOTED IN USD. PRICES ARE SUBJECT TO CHANGE WITHOUT NOTICE.

For additional NXT models, sizes and hardware not shown, please refer to the complete NXT Seating Order Form at www.motioncomposites.com

FOLDING ON CHAIR – USA ORDER FORM

THORACIC SHAPE

Xtend™ LOW HEIGHT ADJUSTABLE THORACIC BACK SUPPORT

HCPCS CODE: E2620-E2621

xtend™	WIDTH	HEIGHT	✓	$
**NHAACB (L)1213/17	12"	13"-17"	☐	$695
NHAACB (L)1413/17	14"	13"-17"	☐	$695
NHAACB (L)1613/17	16"	13"-17"	☐	$695
NHAACB (L)1813/17	18"	13"-17"	☐	$745
NHAACB (L)2013/17	20"	13"-17"	☐	$745
NHAACB (L)2213/17	22"	13"-17"	☐	$745

ITEM	WIDTH X DEPTH	$	QTY
Replacement Cover & Foam	N3LHAACC __ __ X __ __	130	

Xtend™ DEEP HEIGHT ADJUSTABLE THORACIC BACK SUPPORT

HCPCS CODE: E2620-E2621

xtend™ DEEP	WIDTH	HEIGHT	✓	$
NHAPCB1616/20	16"	16"-20"	☐	$695
NHAPCB1816/20	18"	16"-20"	☐	$695
NHAPCB2016/20	20"	16"-20"	☐	$695
NHAPCB2216/20	22"	16"-20"	☐	$745

ITEM	WIDTH X DEPTH	$	QTY
Replacement Cover & Foam	N3HAPCC __ __ X __ __	130	

PLEASE NOTE: Each back will fit widths up to 2" wider.

PELVIC SHAPE

Classic™ PELVIC BACK SUPPORT

HCPCS CODE: E2620-E2621

Classic™	WIDTH	HEIGHT	✓	$
NACB1616	16"-18"	16"	☐	$695
NACB1618	16"-18"	18"	☐	$695
NACB1816	18"-20"	16"	☐	$695
NACB1818	18"-20"	18"	☐	$695
NACB1820	18"-20"	20"	☐	$695
NACB2020	20"-22"	20"	☐	$695
NACB2216	22"-24"	16"	☐	$745
NACB2218	22"-24"	18"	☐	$745
NACB2220	22"-24"	20"	☐	$745

ITEM	WIDTH X DEPTH	$	QTY
Replacement Cover & Foam	NACC __ __ X __ __	130	

Classic™ DEEP PELVIC BACK SUPPORT

HCPCS CODE: E2620-E2621

Classic DEEP™	WIDTH	HEIGHT	✓	$
NPCB1616	16"-18"	16"	☐	$695
NPCB1618	16"-18"	18"	☐	$695
NPCB1818	18"-20"	18"	☐	$695
NPCB1820	18"-20"	20"	☐	$695
NPCB2020	20"-22"	20"	☐	$695
NPCB2216	22"-24"	16"	☐	$745
NPCB2218	22"-24"	18"	☐	$745
NPCB2220	22"-24"	20"	☐	$745

ITEM	WIDTH X DEPTH	$	QTY
Replacement Cover & Foam	NPCC __ __ X __ __	130	

PLEASE NOTE: Each back will fit widths up to 2" wider.

BACK SUPPORT ACCESSORIES

MODEL #	DESCRIPTION	FITS BACK WIDTH	$	QTY
Custom - Cover	Optional Infection Control Wipe Down Back Support Cover	Specify back model # when ordering	205	
NIB-1938	Extra Small Privacy Flap for 11" - 13" wide back supports	11" - 13" (27.9 - 33.0)	70	
NIB-1078	Small Privacy Flap for 14"-16" wide back supports	14" - 16" (35.6-40.6 cm)	70	
NIB-1079	Medium Flap for 17"-19" wide back supports	17" - 19" (43.2-48.3 cm)	70	
NIB-1080	Large Privacy Flap for 20"-22" wide back supports	20" - 22" (50.8-55.9 cm)	70	
NIB-1081	Extra Large Privacy Flap for 23" - 26" wide back supports	23" - 26" (58.4 - 66.0 cm)	70	

MultiFit™ HEAD SUPPORT – MULTI-ADJUSTABLE PADS

HCPCS CODE: E0955

MODEL # NIB-0784	✓	$
10" x 5" Large Rectangular	☐	$205

HCPCS CODE: E0955

MODEL # NIB-0818	✓	$
14" x 5" Extra-Large Rectangular	☐	$205

MultiFit™ HEAD SUPPORT – FIXTURES

HCPCS CODE: E1033

MODEL # NIB-0747	✓	$
Multi-Axis Hardware	☐	$150

MODEL # NIB-0823	✓	$
Head Support Receiver Bracket	☐	$60

ALL PRICES QUOTED IN USD. PRICES ARE SUBJECT TO CHANGE WITHOUT NOTICE.

For additional NXT models, sizes and hardware not shown, please refer to the complete NXT Seating Order Form at www.motioncomposites.com

FOLDING ON CHAIR – USA ORDER FORM

EXTRA COVERS

Extra Outer smartx3D Cover

Extra Outer Incontinent Cover

ITEM	WIDTH X DEPTH	$	QTY
Extra Outer smartx3D Cover – For a cover up to 18" x 18"	__ __ x __ __	130	
Extra Outer smartx3D Cover – For a cover 18" x 20" and above	__ __ X __ __	150	
Extra Outer Incontinent Cover – For a cover up to 18" x 18"	__ __ X __ __	130	
Extra Outer Incontinent Cover – For a cover 18" x 20" and above	__ __ X __ __	150	

ALL PRICES QUOTED IN USD. PRICES ARE SUBJECT TO CHANGE WITHOUT NOTICE.

For additional NXT models, sizes and hardware not shown, please refer to the complete NXT Seating Order Form at www.motioncomposites.com