MOTION COMPOSITES
160 Armand-Majeau Sud
Saint-Roch-de-l'Achigan, QC, Canada J0K 3H0
T.+1-866-650-6555 F. +1-888-966-6555
quotes@motioncomposites.com
orders@motioncomposites.com
www.motioncomposites.com

6.5

Helio A6

ORDER FORM - CANADA

1- Purchasing information

P.O. number:* Date:

Company Name:*

Purchasing contact:*

Phone:*

Email:*

Contact preference:* Phone ☐ Email ☐

Marked for:

2- Dealer/Representative information

Dealer/Representative:*

Phone:*

Email:*

Contact preference:* Phone ☐ Email ☐

3- Shipping information

Ship to:*

Name:

Address:

City: Province:

Postal Code:

Phone:

** Required*

MA080 ☐ *English Manual (STD)* *MA081* ☐ *French Manual* *Taxes not included*

MODEL					
WC19	☐	Ultralight folding Helio A6 Wheelchair - *6000 series aluminum (265lb weight capacity)*		WM0001489	**$2,395**
WC09	☐	**HD** Heavy duty kit *(350 lb weight capacity)*			$825
Frame					
SEAT WIDTH [3]					
SW	☐	14" ☐ 15" ☐ 16" ☐ 17" ☐ 18" [1] ☐			NC
	☐	19" [1] ☐ 20" [1] ☐ 21" [2] ☐ 22" [2] ☐		WAMA	$315
SEAT DEPTH					
SD	☐	14" ☐ 15" ☐ 16" ☐ 17" ☐ 18" ☐			NC
	☐	19" ☐ 20" ☐		WAMB	$235
TRANSIT TIE DOWN					
AC04	☐	Transit Tie Down *(Unoccupied)*			NC
AC05-S	☐	WC-19 Transit Tie Down w/Q'straint belt [4] Short belt 20"-41"			$365
AC05-L	☐	WC-19 Transit Tie Down w/Q'straint belt [4] Long belt 20"-46"			$365
AC35	☐	WC-19 Transit Tie Down without belt [4]			$345

1- *Available with HD Kit (350 lb);* ***2-*** *Only with HD Kit (350 lb)*

3. Width calculator

4- *May interfere with swing away armrest and Clamp on height adjustable push handle; Not available with HD option*

PACKAGES			
VP01	☐	Vision Package: *Orange accent added to point of contact accessories including: footrest latches, "T" and fllp back armrest button cap, 6" Push to lock extension and rubber inserts on Newton composite angle adjustable footplates* [1]	$95

1- Please select footplates, footrest, armrest, push to lock wheel lock and the extensions in the appropriate sections; To know the compatible parts, look for this logo ****VP01*** *; Recommended with black chair; See picture of the product on page 7.*

A6 FRONT Seat-to-floor Height - Please select your choice

Forks / Position		3" caster Stem bolt Length STD	3" caster +1"	3" caster +2"	4" caster STD	4" caster +1"	4" caster +2"	5" caster STD	5" caster +1"	5" caster +2"	6" caster STD	6" caster +1"	6" caster +2"	7" caster STD	7" caster +1"	7" caster +2"	8" caster STD	8" caster +1"	8" caster +2"
4"	P1	12"	13"	14"	12 1/2"	13 1/2"	14 1/2"												
	P2	12 1/2"	13 1/2"	14 1/2"	13"	14"	15"	13 1/2"	14 1/2"	15 1/2"									
5"	P1																		
	P2				13"	14"	15"	13 1/2"	14 1/2"	15 1/2"									
	P3	13"	14"	15"	13 1/2"	14 1/2"	15 1/2"	14"	15"	16"	14 1/2"	15 1/2"	16 1/2"						
	P4	13 1/2"	14 1/2"	15 1/2"	14"	15"	16"	14 1/2"	15 1/2"	16 1/2"	15"	16"	17"	15 1/2"	16 1/2"	17 1/2"			
7"	P1										15 1/2"	16 1/2"	17 1/2"	16"	17"	18"			
	P2							15 1/2"	16 1/2"	17 1/2"	16"	17"	18"	16 1/2"	17 1/2"	18 1/2"			
	P3							16"	17"	18"	16 1/2"	17 1/2"	18 1/2"	17"	18"	19"	17 1/2"	18 1/2"	19 1/2"
	P4	15 1/2"	16 1/2"	17 1/2"	16"	17"	18"	16 1/2"	17 1/2"	18 1/2"	17"	18"	19"	17 1/2"	18 1/2"	19 1/2"	18"	19"	20"
	P5	16"	17"	18"	16 1/2"	17 1/2"	18 1/2"	17"	18"	19"	17 1/2"	18 1/2"	19 1/2"	18"	19"	20"	18 1/2"	19 1/2"	20 1/2"
Froglegs	P1				13 1/2	14 1/2	15 1/2												
	P2	13 1/2	14 1/2	15 1/2	14	15	16	14 1/2	15 1/2	16 1/2									
	P3	14	15	16	14 1/2	15 1/2	16 1/2	15	16	17	15 1/2	16 1/2	17 1/2						

Height available +- 1/4" (see stem bolt and fork combination at the end of the order form)

CASTERS			Availability		
CA01-03 to CA01-08		Composite wheel w/ PU tire (1")	3", 4", 5", 6", 7", 8"		NC
CA10 to CA11		Pneumatic casters (1 ¼")	6", 8"		$170
CA14 to CA16		Newton UltraCaster Composite (1 ½ ")	4", 5", 6"		$105
CA17 to CA19		Newton UltraCaster Aluminum (1 ½ ")	4", 5", 6"		$198
CASTER OPTIONS					
CA12		Caster Pin Locks *(Available with +1" or +2" Stem bolt ONLY)* [1]		WAMS	$275
CA13		Carbon fiber Frog Legs suspension forks (Not available with caster pin locks)			$525

1- Not available with WC-19

Helio A6 - REAR Seat-to-floor Height - Please select your choice

20" (451)	22" (501)	24" (540)	25" (559)	26" (590)
12"	13"	13 3/4" [1]	14 1/4"	14 3/4"
12 1/2"	13 1/2"	14 1/4"	14 3/4"	15 1/4"
13"	14"	14 3/4"	15 1/4"	15 3/4"
13 1/2"	14 1/2"	15 1/4"	15 3/4"	16 1/4"
14"	15"	15 3/4"	16 1/4"	16 3/4"
14 1/2"	15 1/2"	16 1/4"	16 3/4"	17 1/4"
15"	16"	16 3/4"	17 1/4"	17 3/4"
15 1/2"	16 1/2"	17 1/4"	17 3/4"	18 1/4"
16"	17"	17 3/4"	18 1/4"	18 3/4"
16 1/2"	17 1/2"	18 1/4"	18 3/4"	19 1/4"
17"	18"	18 3/4"	19 1/4"	19 3/4"
17 1/2"	18 1/2"	19 1/4" [1]	19 3/4"	20 1/4"

Configuration used: 1" seat slope with a center of gravity at 2" ***1-*** *Not available with One Arm Drive*

Note: Tire size, center of gravity setting and seat slope may result in a variation of +/- ½" of selected seat to floor height"

Footrest

SWING-IN/SWING-OUT FOOTREST						
FR03-01	☐	60° Swing-in/swing-out footrest - 13.5" - 17"		Set at*:		NC
FR03-02	☐	60° Swing-in/swing-out footrest - 14.5" - 19.5"		Set at*:		NC
FR03-03	☐	60° Swing-in/swing-out footrest - 15.5" - 20.5"		Set at*:		NC
FR04-01	☐	70° Swing-in/swing-out footrest - 13.5" - 17"		Set at*:		NC
FR04-02	☐	70° Swing-in/swing-out footrest - 14.5" - 19.5"		Set at*:		NC
FR04-03	☐	70° Swing-in/swing-out footrest - 15.5" - 20.5"		Set at*:		NC
FR15-01	☐	80° Swing-in/swing-out footrest - 13.5" - 16" [5]		Set at*:		NC
FR15-02	☐	80° Swing-in/swing-out footrest - 14.5" - 19.5" [5]		Set at*:		NC
FR15-03	☐	80° Swing-in/swing-out footrest - 15.5" - 20.5" [5]		Set at*:		NC
FR06	☐	90° swing-in/swing-out with front mount - Standard (no extension) [1]	7.5" - 11"	Set at*:		NC
FR07	☐	90° swing-in/swing-out with front mount - Short extension 2" [1, 2]	9.5"- 13"	Set at*:		NC
FR08	☐	90° swing-in/swing-out with front mount - Medium extension 4" [1, 2]	9.5" - 14.5"	Set at*:		NC
FOOTREST OPTIONS						
FR09	☐	High mount *(footplate attached to the hanger with clamps)* [3]	5" - 13.5"	Set at*:		$105
FR10	☐	Elevating legrest with calf pad, Length adjustable [4] Left ☐ Right ☐	14" - 22"	Set at:	WAMK	$295
FR99	☐	Omit Footrest				NC

1- *Available only with two piece adjustable footplates;* ***2-*** *May interfere with front casters;* ***3-*** *Not available with front mount and the elevating legrest; * +/- 1/2"*
4- *The elevating legrest replace the footrest side selected; Not available with one piece footplate;* ***5-*** *Not available with 8" caster*

FOOTPLATES					
FP01	☐	Standard - Composite[1]			STD
FP02	☐	Newton adjustable angle - Composite *VP01		WAMJ	$155
FP03	☐	Newton adjustable angle - Aluminum		WAMJ	$175
FP23	☐	Newton adjustable angle extra deep - Aluminum		WAMJ	$175
FP06	☐	One piece adjustable angle flip-up - Aluminum	WAMJ	SEFND0015	$215
FOOTPLATE ACCESSORIES					
FP08	☐	Length adjustable heel loop [2]			NC
FP09	☐	Calf strap		SEFND0010	$57
FP30	☐	Bodypoint Aeromesh Padded calf strap		SEFND0010	$140

1- *Not available with front mount;* ***2-*** *not available with one piece footplate*

SWING AWAY RESIDUAL LIMB SUPPORT						
FR27	☐	Residual limb support - flat 6"x8"	Left ☐	Right ☐	SEFND0005	$505
FR28	☐	Residual limb support - flat 8"x10"	Left ☐	Right ☐	SEFND0005	$505
FR29	☐	Residual limb support - flat 10"x10"	Left ☐	Right ☐	SEFND0005	$505
FR30	☐	Residual limb support - flat 10"x14"	Left ☐	Right ☐	SEFND0005	$505
FR32	☐	Residual limb support - contour 6"x8"	Left ☐	Right ☐	SEFND0005	$505
FR33	☐	Residual limb support - contour 8"x10"	Left ☐	Right ☐	SEFND0005	$505

Backrest

FIXED ANGLE BACK CANES WITH INTEGRATED PUSH HANDLE *(push handle included - no further selection needed)*							
BC58-915	☐	Straight aluminum back cane	9" - 15"	*increment of 1/2"*	Set at [2]:		NC
BC58-1521	☐	Straight aluminum back cane	15" - 21"	*increment of 1/2"*	Set at [2]:		NC
BC60	☐	Straight aluminum back cane	21" - 24"	*increment of 1"*	Set at [2]:		$100
BC01-16	☐	8° bend aluminum back cane	16"				NC
BC01-18	☐	8° bend aluminum back cane	18"				NC
BC01-20	☐	8° bend aluminum back cane	20"				NC
BC59	☐	8° bend aluminum back cane	21" - 24"	*increment of 1"*	Set at [2]:		$100
FIXED ANGLE, HEIGHT ADJUSTABLE BACK CANES WITH PUSH HANDLE OPTIONS *(MUST select ONE push handle options)*							
BC11-912	☐	Straight aluminum back cane	9" - 12"	*increment of 1/2"*	Set at [2]:		$80
BC11-1215	☐	Straight aluminum back cane	12" - 15"	*increment of 1/2"*	Set at [2]:		$80
BC11-1518	☐	Straight aluminum back cane	15" - 18"	*increment of 1/2"*	Set at [2]:		$80
BC11-1821	☐	Straight aluminum back cane	18" - 21"	*increment of 1/2"*	Set at [2]:		$80
BC12-1315	☐	8° bend aluminum back cane	13.5" - 15"	*increment of 1/2"*	Set at [2]:		$85
BC12-1518	☐	8° bend aluminum back cane	15" - 18"	*increment of 1/2"*	Set at [2]:		$85
BC12-1821	☐	8° bend aluminum back cane	18" - 21"	*increment of 1/2"*	Set at [2]:		$85
ANGLE AND HEIGHT ADJUSTABLE BACK CANE WITH PUSH HANDLE OPTIONS *(MUST select ONE push handle options)*							
BC13-1518	☐	Straight aluminum back cane	15" - 18"	*increment of 1/2"*	Set at [2]:		$275
BC13-1821	☐	Straight aluminum back cane	18" - 21"	*increment of 1/2"*	Set at [2]:		$275
BC14-1518	☐	8° bend aluminum back cane	15" - 18"	*increment of 1/2"*	Set at [2]:		$330
BC14-1821	☐	8° bend aluminum back cane	18" - 21"	*increment of 1/2"*	Set at [2]:		$330
		Select back cane angle:	85° [1] ☐	90° **STD** ☐	95° ☐	100° ☐	105° ☐ 110° ☐
PUSH HANDLES OPTIONS *(ONE option at a time)*							
PH01	☐	Push handles					STD
PH05	☐	Fold down push handles [3, 5]					$165
PH06-920	☐	Clamp on height adjustable push handles 9"-20" [3,4, 5]					$345
PH06-923	☐	Clamp on height adjustable push handles 9"-23" [3,4, 5]					$345
PH02	☐	Omit push handles					NC
STROLLER HANDLE AND STABILIZER BAR *(only available with push handle)*							
PH04	☐	Stroller handle *(not available with the HD option)*				WAMW	$220
PH03	☐	Newton folding stabilizer bar *(not available with stroller handle)*					$275

1- *Not compatible with 8 degree bent back cane;* ***2-*** *If not indicated, default height setting is at the lowest position; measured from seat sling to top of back upholstery;* ***3-*** *265lb weight limit*

4- *Not compatible with swing away armrests, 8° bend back canes, 21-24" back canes and amputee axle plates; 5- Not compatible with stroller handler, stabilizer bar, headrest and attendant lock;*

BACK UPHOLSTERY					
BH05	☐	Slip-on Nylon back upholstery			NC
BH06	☐	Adjustable tension Nylon back upholstery		WAMD/WAME	$260
BH99	☐	Omit Back upholstery			STD
	☐	NXT back Support			See price list
SEAT CUSHION					
SC01	☐	2" Cushion			$185
SC02	☐	3" Cushion			$205
SC99	☐	Omit seat cushion			STD
	☐	NXT cushion			See price list

Rear wheels

ONE ARM DRIVE [1]		*Only available with Newton One rear wheel, permanent axles and 0° camber*			
HR22	☐	One arm drive - aluminum inner handrim [2] Left ☐ Right ☐		WAML	$1,480
HR60	☐	One arm drive - plastic coated inner handrim [2] Left ☐ Right ☐		WAML	$1,595
HR98	☐	Omit handrim on opposite side of the One Arm Drive (OAD)			NC
REAR WHEELS			Available		
RW01	☐	Mag [3]	20", 22" 24"		$140
RW02	☐	Newton One - spoke wheel [4]	20", 22" 24"		NC
RW03	☐	Newton Gravity - ultralight wheel	20", 22", 24", 25", 26"		$390
RW04	☐	Spinergy Spox **Blk STD** ☐ Wht [5] ☐ Blue [5] ☐ Red [5] ☐ Yel [5] ☐	22", 24", 25", 26"		$875
RW05	☐	Spinergy LX **Blk STD** ☐ Pur [5] ☐ Wht [5] ☐ Blue [5] ☐ Red [5] ☐ Yel [5] ☐ Pink [5] ☐ Grn [5] ☐ Org [5] ☐	22", 24", 25", 26"		$1,095
RW07	☐	Spinergy CLX [6] **Blk STD** ☐ Pur [5] ☐ Wht [5] ☐ Blue [5] ☐ Red [5] ☐ Yel [5] ☐ Pink [5] ☐ Grn [5] ☐ Org [5] ☐	24", 25"		$1,650
TIRES			Available		
		AIRLESS			
TI01	☐	Soft Urethane 1 3/8" - Low Tread, black	20", 22" 24"		STD
TI02	☐	Soft Urethane 1 3/8 " - Medium Tread, black [7]	22", 24", 25", 26"		$120
TI04	☐	Soft Urethane 1" - No tread, black - *Shox*	22", 24", 25", 26"		$140
TI08	☐	Pneumatic Airless insert 1 3/8" - Medium Tread [8]	22", 24", 26"		$225
		PNEUMATIC			
TI05	☐	Pneumatic 1 3/8" - Medium Tread	20", 22", 24", 25", 26"		NC
TI06	☐	Pneumatic HP 1" - Low Tread, Puncture resistant, black - *SpeedLite*	20", 22", 24", 25", 26"		$120
TI07	☐	Pneumatic HP 1" - Medium Tread, Puncture resistant, black - *TrailBlazer*	24", 25", 26"		$200
TI03	☐	Pneumatic 2" - Large Tread, black [9]	22", 24", 25"		$130

1- *Offered with handrims on each side of the wheelchair; select the outer handrim in the handrims section; Only available with 24" wheel size; Not available with 21" and 22" wide;*
2- *Only standard handrim position available;* ***3-*** *Not compatible with HP tires ; Only available with aluminum or plastic coated handrim, standard position;* ***4-*** *Not compatible with Shox tires;*
5- *color spokes require an additionnal 10 days lead-time;* ***6-*** *Only available with 1" tires;* ***7-*** *22" is only available with Mags and Newton One rear wheels;*
8- *Not available with Spinergy CLX, Spinergy LX 25", 26" and Spox 25", 26" rear wheels;* ***9-*** *Not available with armrests when 3° camber is selected.*

Handrims

HANDRIM			Available		
HR01	☐	Aluminum anodized	20", 22", 24", 25", 26"		STD
HR61	☐	Aluminum black hard anodized [2]	20", 22", 24", 25"		$85
HR02	☐	Plastic coated [1]	20", 22", 24", 25", 26"	WAMO	$170
HR03	☐	High friction coated [1,2,3]	22", 24", 25", 26"	WAMO	$460
HR07-HR18 and HR65-HR71	☐	Newton Air Grip [2] *See page 6 for the color selection and price*	20", 22", 24", 25", 26"	WAMO	
HR28	☐	Surge [1,2,3] *(1 1/2" Oval handrim w/ Gripton high friction strip)*	22", 24", 25", 26"		$485
HR05	☐	Surge LT [1,2,3] *(1 1/8" Oval handrim w/ Gripton high friction strip)*	22", 24", 25", 26"		$515
HR04	☐	Natural Fit [1,2,3]	22", 24", 25", 26"		$320
HR62	☐	Simi H [1,2,3] *(1 3/8" Oval handrim with high friction strip)*	22", 24", 25", 26"		$485
HR63	☐	Nova H [1,2,3] *(1 1/4" Oval handrim with high friction strip)*	22", 24", 25", 26"		$515
HR64	☐	Optimum H [1,2,3] *(1 1/8" heart-shaped handrim)*	22", 24", 25", 26"		$320
HR99	☐	Omit handrim			NC

1- *Only standard and narrow handrim position. By default, the tab won't be cut with the narrow position;* ***2-*** *Not available with Mag wheels;* ***3*** *- Not available with one arm drive;*

Handrims option

ASSEMBLY POSITION					
HR29	☐	Standard Handrim position *Full tab*			STD
HR030	☐	Narrow Handrim position no cut *Full tab*			NC
HR30	☐	Narrow Handrim position with cut [3] *Short tab 2 positions*			$29
HR31	☐	Super Narrow Handrim [3] *Short tab 2 positions STD* ☐ *Short tab 1 position* ☐			$29
THUMB PIECE SELECTION FOR NATURAL FIT, SURGE, SURGE LT HANDRIMS					
HR23	☐	Standard grip			$200
HR27	☐	Super grip			$230
HR099	☐	Omit thumb piece			NC

3- *Only available with Aluminum and Air Grip handrims;*

AXLE					
AX01	☐	Quick release axle [1]		WAMU	STD
AX02	☐	Permanent axle			NC
AX03	☐	Quad release axle [1]		WAMU	$180
AXLE PLATE					
AX04	☐	Amputee adjustable axle plate [2]		WAMT	$275

1- *Not required with one arm drive;* ***2*** *- May interfere with swing away armrest and limit seat to floor height; Not available with WC-19 transit tie down*

REAR WHEEL CAMBER					
CM00	☐	0° camber			STD
CM03	☐	3° camber			NC

CENTER OF GRAVITY

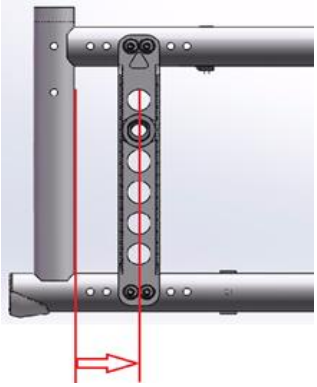

Choose position of rear wheel axle plate:

Measure distance from front of back post to center of axle receiver.

Default setting is at 1 1/4"

Most stable						Most responsive
AMPUTEE[1]	3/4"	1" 1/4	1" 3/4	2" 1/4	2" 3/4	
☐	☐	☐	☐	☐	☐	

Motion Composites will select the closest possible center of gravity (COG) if an issue arises with the COG

1- Only available with amputee axle plate

WHEEL LOCK					
WL08	☐	Newton Wheel lock - push to lock			STD
WL16	☐	Aluminum push to lock **with** extensions			$73
WL02	☐	Pull to lock			NC
WL04	☐	Newton grade aid push to lock *(works best with pneumatic or high pressure tire)*		WAMR	$185
WL13 WL14	☐	6" removable extension handle [1] *VP01			$73
WL05	☐	Scissors Lock			$185
WL06	☐	Attendant Lock *(additional set of wheel lock mounted to the back)*			$240
WL15	☐	Unilateral wheel lock - pull to lock[2] Left ☐ Right ☐		WAMN	$335
WL99	☐	Omit wheel locks			NC

1- Only available with Newton push to lock (WL08), pull to lock (WL02) and Newton Grade aid (WL04); Only the extension for the Newton push to lock is available with the vision package (VP01)
2- For more information about incompatibilties and restriction, refer to the table at page 7 and the "How-to documents" page of our website:
https://www.motioncomposites.com/en_ca/support-and-education/how-to-documents

Armrests

HEIGHT ADJUSTABLE FLIP BACK ARMREST *(Convertible to "T" armrest)* [1,4] *VP01							
AR01-812	☐	10" Desk length armpad 8" - 12"	Locked ☐	Unlocked STD ☐			$395
AR01-1014	☐	10" Desk length armpad 10" - 14"	Locked ☐	Unlocked STD ☐			$395
AR02-812	☐	14" Full length armpad 8" - 12"	Locked ☐	Unlocked STD ☐			$395
AR02-1014	☐	14" Full length armpad 10" - 14"	Locked ☐	Unlocked STD ☐			$395
HEIGHT ADJUSTABLE "T" ARMREST [1] *VP01							
AR13-610	☐	10" Desk length armpad [5] 6" - 10"					$380
AR13-812	☐	10" Desk length armpad 8" - 12"					$380
AR13-1014	☐	10" Desk length armpad 10" - 14"					$380
AR14-610	☐	14" Full length armpad [5] 6" - 10"					$380
AR14-812	☐	14" Full length armpad 8" - 12"					$380
AR14-1014	☐	14" Full length armpad 10" - 14"					$380
SWING AWAY ARMREST [2]							
AR05	☐	Tubular armrest - Short pad 8" - 11"					$315
AR23	☐	Tubular armrest - long pad 8" - 11"					$315
AR06	☐	10" Desk length flat armpad 8" - 11"					$315
AR17	☐	14" Full length flat armpad 8" - 11"					$315
ARMREST OPTIONS							
AR12	☐	14'' Full Length armpad - Gel Ovation (pair) [3]				SEAND0030	$160
AR99	☐	Omit armrest					NC

***1-** May have 1/2" adjustment restriction on both limits of the range; **2-** Could interfere with some rigid backrests; Not available with attendant lock and fixed carbon fiber side guards;*
***3-** Only available with full length armrest; Not available with swing away and desk lenght armrests; **4-** Not available with attendant lock; **5-** May have some restriction with seat-to-floor height and rear wheel*

SIDE GUARDS *(not available with Flip Back and "T" Armrest)*							
SG01	☐	Plastic side guards *(removable)*	Straight bracket - STD ☐	Offset bracket[1] ☐		WAMV	$235
SG02	☐	Carbon fiber side guards *(fixed)*				WAMV	$285
SG03	☐	Carbon fiber side guards *(removable)*	Straight bracket - STD ☐	Offset bracket[1] ☐		WAMV	$320
SG06	☐	Plastic fender side guards *(removable)*	Straight bracket - STD ☐	Offset bracket[1] ☐		WAMV	$340
SG04	☐	Carbon fiber fender side guards *(removable)*	Straight bracket - STD ☐	Offset bracket[1] ☐		WAMV	$510
SG99	☐	Omit side guard					NC
SIDE GUARDS OPTION							
SG07	☐	Side guards clip *(pair)* [2]					NC

***1-** only compatible with 0° camber;Increase width by 1/2" per side for a total of 1" ; **2-** Not available with fixed carbon fiber side guard*

POSITIONING BELT					
SB01-S	☐	Velcro adjustable - **Small 35"** [1]			$50
SB01-L	☐	Velcro adjustable - **Long 60"**			$50
SB02-S	☐	Auto buckle - **Small 35"** [1]			$60
SB02-M	☐	Auto buckle - **Medium 48"**			$60
SB02-L	☐	Auto buckle - **Long 60"**			$60
SB04-M	☐	BodyPoint Hip Belt - 2 point not padded - **Medium 56"**			$95
SB04-L	☐	BodyPoint Hip Belt - 2 point not padded - **Long 61"**			$95
SB05-S	☐	BodyPoint Hip Belt - 2 point padded - **Small 51"**		SERND0030	$185
SB05-M	☐	BodyPoint Hip Belt - 2 point padded - **Medium 56"**		SERND0030	$185
SB05-L	☐	BodyPoint Hip Belt - 2 point padded - **Long 61"**		SERND0030	$185
SB06-S	☐	BodyPoint Hip Belt - 4 point padded - **Small 51"**		SERND0020	$210
SB06-M	☐	BodyPoint Hip Belt - 4 point padded - **Medium 56"**		SERND0020	$210
SB06-L	☐	BodyPoint Hip Belt - 4 point padded - **Long 61"**		SERND0020	$210
SB03	☐	Hardware attachment for 2 extra points (1 pair)			$15
SB08-M	☐	BodyPoint EVOFLEX® Positioning Belt Rehab latch and Band Clamps - **Medium 18"**			$355
SB08-L	☐	BodyPoint EVOFLEX® Positioning Belt Rehab latch and Band Clamps - **Long 24"**			$355
SB99	☐	Omit positioning belt			STD

1- Not recommended for seat width of 18" and more

HEADREST					
AC01-S	☐	Profiled Headrest - **Small (3.5"X6")**			$215
AC01-M	☐	Profiled Headrest - **Medium (4.5"X7")**			$215
AC01-L	☐	Profiled Headrest - **Large (5.5"X8")**			$215
AC28	☐	Headrest mounting hardware with removable non folding stabilizer bar [1]			$360

1- Only available with push handles - Not available with a stroller handle or a folding stabilizer bar

ACCESSORIES					
AC03	☐	Anti-tippers			$120
AC29	☐	Swing-away anti-tipper[1] Left ☐ Right ☐			$185
AC27	☐	Tip assist [2]			$65
AC06	☐	Cane and crutch holder Left ☐ Right ☐			$115
AC07	☐	Oxygen			$395
AC08	☐	Spoke guards [3] Available: 20", 22", 24", 26"			$155
AC09	☐	Footrest neoprene impact guard *(pair)* - Black			$85
AC10	☐	Seat pouch			$100
AC30	☐	Newton multi-purpose pouch			$75
AC26	☐	BodyPoint Mobility Bag			$145
AC23	☐	Newton Backpack			$130
AC12	☐	Velcro Closing Strap			$55
AC13	☐	Tool kit			$55
AC16	☐	Motion Composites Polo Shirt W/S ☐ W/M ☐ W/L ☐ M/S ☐ M/M ☐ M/L ☐ M/XL ☐ M/XXL ☐ M/XXXL ☐			$36

***1-** Must select the pair (left and right) with HD option; Only available with rear seat to floor height between 13 1/2" and 19 3/4"; **2-** Cannot be combined with Anti Tippers*

***3-** Not available with Mag wheels and Spinergy; **4-** Not compatible with swing away armrest, amputee axle plate and WC-19 transit tie-down*

Colors

Options [1]	Black	Sunkissed Orange	Burgundy	Sapphire Blue	Monster Green	Charcoal	Fuchsia	Steel Blue	Ferrari Red	Acid Green	Electric Purple	Caribbean Blue	White	Pink Pearl	Plum Purple	Sky Blue	Black Cherry	Khaki Green (matte)	Desert Sand (matte)	
AirGrip	☐ $160	☐	☐	☐	☐	☐	☐	☐	☐	☐	☐	☐	☐	☐	☐	☐	☐	☐	☐	$350
Frame [2]	☐ STD	☐	☐	☐	☐	☐	☐	☐	☐	☐	☐	☐	☐	☐	☐	☐	☐	☐	☐	NC
FC99	☐	Custom Color	Specify PPG Paintit color:																*additional 10 days lead-time*	$422

***1-** Color representation may vary from one monitor to another. Therefore, the actual paint color on your wheelchair might differ slightly from what you see on your screen.; Finish between Airgrip and frame might be different;*

***2-** with black hydroformed aluminum crossbrace*

Fork and Stem bolt combinations

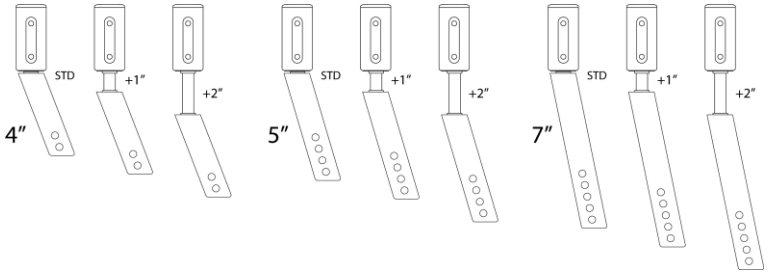

Vision Package Accents

Unilateral wheel lock restrictions

Seat depth: shall be 16 in and greater		
Rear wheel: shall be 24 in and less		
"T" or flip-back armrest only compatible with 0° Camber		
One arm drive: Not compatible with "T" or flip-back armrest		
"T" or flip-back armrest may require to move the rear wheels outwards		
Not compatible with wheel lock lever extension		
Rear wheel diameter	Seat depth (in)	COG Compatibility Range (in)
20 in	16+	1.25 to 2.75
22 in	16	0.75 to 2.25
	17+	0.75 to 2.75
24 in	16	0.75 to 1.75
	17	0.75 to 2.25
	18+	0.75 to 2.75

Note :

FOLDING ON CHAIR – CDN ORDER FORM

BioFit™ CUSHION

NXCABF __ __ _ __
(W" x D")

DEPTH \ WIDTH	12"	13"	14"	15"	16"	17"	18"	19"	20"	21"	22"
12"	☐ $625	☐ $625	☐ $625								
14"	☐ $625	☐ $625	☐ $625								
15"		☐ $625	☐ $625	☐ $625	☐ $625						
16"		☐ $625	☐ $625	☐ $625	☐ $625	☐ $625	☐ $625	☐ $655	☐ $655	☐ $655	☐ $655
17"				☐ $625	☐ $625	☐ $625	☐ $625	☐ $655	☐ $655		
18"				☐ $625	☐ $625	☐ $625	☐ $625	☐ $655	☐ $655	☐ $655	☐ $655
19"				☐ $625	☐ $625	☐ $625	☐ $625	☐ $655	☐ $655		
20"				☐ $625	☐ $625	☐ $625	☐ $655	☐ $655	☐ $655	☐ $655	☐ $655
Option: Change cover for incontinent / infection control outer cover											☐ N/C

SEATING AND CUSHION ACCESSORIES

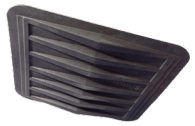

Model #	Description	Fits Back Width	$	QTY
RSSI 1600	Solid Seat Insert	Fits cushions 16" & 17" wide (40.6 & 43.2 cm) and 14"-18" deep (35.6-45.7 cm)	80	
RSSI 1800	Solid Seat Insert	Fits cushions 18" & 19" wide (45.7 & 48.3 cm) and 14"-18" deep (35.6-45.7 cm)	80	
RSSI 2000	Solid Seat Insert	Fits cushions 20"-22" wide (50.8-55.9 cm) and 18"-20" deep (45.7-50.8 cm)	80	

THORACIC SHAPE

Optima™
THORACIC BACK SUPPORT

CARBON FIBER SHELL (WEIGHT SAVINGS – 1lb)

WIDTH	HEIGHT	MODEL # CARBON FIBER	$ CARBON	MODEL # ALUMINUM	$ ALUMINUM
14"	13"	NOCFACB1413	☐ $1150	NOACB1413	☐ $720
14"	16"	NOCFACB1416	☐ $1150	NOACB1416	☐ $720
15"	13"	NOCFACB1513	☐ $1150	NOACB1513	☐ $720
15"	16"	NOCFACB1516	☐ $1150	NOACB1516	☐ $720
16"	13"	NOCFACB1613	☐ $1150	NOACB1613	☐ $720
16"	16"	NOCFACB1616	☐ $1150	NOACB1616	☐ $720
16"	19"			NOACB1619	☐ $720
17"	13"	NOCFACB1713	☐ $1150	NOACB1713	☐ $720
17"	16"	NOCFACB1716	☐ $1150	NOACB1716	☐ $720
18"	13"	NOCFACB1813	☐ $1150	NOACB1813	☐ $720
18"	16"	NOCFACB1816	☐ $1150	NOACB1816	☐ $720
18"	19"			NOACB1819	☐ $720
19"	16"			NOACB1916	☐ $720
19"	19"			NOACB1919	☐ $720
20"	13"	NOCFACB2013	☐ $1150	NOACB2013	☐ $720
20"	16"	NOCFACB2016	☐ $1150	NOACB2016	☐ $720
20"	19"			NOACB2019	☐ $720
21"	16"			NOACB2116	☐ $755
21"	19"			NOACB2119	☐ $755
22"	13"			NOACB2213	☐ $755
22"	16"			NOACB2216	☐ $755
22"	19"			NOACB2219	☐ $755

ITEM	WIDTH X DEPTH	$	QTY
Replacement Cover & Foam	NOACC __ __ __ __	130	

Optima™ DEEP
THORACIC BACK SUPPORT

CARBON FIBER SHELL (WEIGHT SAVINGS – 1lb)

WIDTH	HEIGHT	MODEL # CARBON FIBER	$ CARBON	MODEL # ALUMINUM	$ ALUMINUM
14"	13"	NOCFPCB1413	☐ $1150	NOPCB1413	☐ $790
14"	16"	NOCFPCB1416	☐ $1150	NOPCB1416	☐ $790
15"	13"	NOCFPCB1513	☐ $1150	NOPCB1513	☐ $790
15"	16"	NOCFPCB1516	☐ $1150	NOPCB1516	☐ $790
16"	13"	NOCFPCB1613	☐ $1150	NOPCB1613	☐ $790
16"	16"	NOCFPCB1616	☐ $1150	NOPCB1616	☐ $790
16"	19"			NOPCB1619	☐ $790
17"	13"	NOCFPCB1713	☐ $1150	NOPCB1713	☐ $790
17"	16"	NOCFPCB1716	☐ $1150	NOPCB1716	☐ $790
18"	13"	NOCFPCB1813	☐ $1150	NOPCB1813	☐ $790
18"	16"	NOCFPCB1816	☐ $1150	NOPCB1816	☐ $790
18"	19"			NOPCB1819	☐ $790
19"	16"			NOPCB1916	☐ $790
19"	19"			NOPCB1919	☐ $790
20"	13"	NOCFPCB2013	☐ $1150	NOPCB2013	☐ $790
20"	16"	NOCFPCB2016	☐ $1150	NOPCB2016	☐ $790
20"	19"			NOPCB2019	☐ $790
21"	16"			NOPCB2116	☐ $860
21"	19"			NOPCB2119	☐ $860
22"	13"			NOPCB2213	☐ $860
22"	16"			NOPCB2216	☐ $860
22"	19"			NOPCB2219	☐ $860

ITEM	WIDTH X DEPTH	$	QTY
Replacement Cover & Foam	NOPCC __ __ __ __	130	

PLEASE NOTE: Each back will fit widths up to 2" wider.

ALL PRICES QUOTED IN CDN. PRICES ARE SUBJECT TO CHANGE WITHOUT NOTICE.

For additional NXT models, sizes and hardware not shown, please refer to the complete NXT Seating Order Form at www.motioncomposites.com

FOLDING ON CHAIR – CDN ORDER FORM

THORACIC SHAPE

Xtend™ LOW HEIGHT ADJUSTABLE THORACIC BACK SUPPORT

xtend™	WIDTH	HEIGHT	✓	$
**NHAACB (L)1213/17	12"	13"-17"	☐	$725
NHAACB (L)1413/17	14"	13"-17"	☐	$725
NHAACB (L)1613/17	16"	13"-17"	☐	$725
NHAACB (L)1813/17	18"	13"-17"	☐	$725
NHAACB (L)2013/17	20"	13"-17"	☐	$755
NHAACB (L)2213/17	22"	13"-17"	☐	$755

ITEM	WIDTH X DEPTH	$	QTY
Replacement Cover & Foam	N3LHAACC __ __ __ __	130	

Xtend™ DEEP HEIGHT ADJUSTABLE THORACIC BACK SUPPORT

xtend™ DEEP	WIDTH	HEIGHT	✓	$
NHAPCB1616/20	16"	16"-20"	☐	$755
NHAPCB1816/20	18"	16"-20"	☐	$755
NHAPCB2016/20	20"	16"-20"	☐	$755
NHAPCB2216/20	22"	16"-20"	☐	$755

ITEM	WIDTH X DEPTH	$	QTY
Replacement Cover & Foam	N3HAPCC __ __ __ __	130	

PLEASE NOTE: Each back will fit widths up to 2" wider.

PELVIC SHAPE

Classic™ PELVIC BACK SUPPORT

Classic™	WIDTH	HEIGHT	✓	$
NACB1616	16"-18"	16"	☐	$720
NACB1618	16"-18"	18"	☐	$720
NACB1816	18"-20"	16"	☐	$720
NACB1818	18"-20"	18"	☐	$720
NACB1820	18"-20"	20"	☐	$720
NACB2020	20"-22"	20"	☐	$720
NACB2216	22"-24"	16"	☐	$755
NACB2218	22"-24"	18"	☐	$755
NACB2220	22"-24"	20"	☐	$755

ITEM	WIDTH X DEPTH	$	QTY
Replacement Cover & Foam	NACC __ __ __ __	130	

Classic™ DEEP PELVIC BACK SUPPORT

Classic DEEP™	WIDTH	HEIGHT	✓	$
NPCB1616	16"-18"	16"	☐	$825
NPCB1618	16"-18"	18"	☐	$825
NPCB1818	18"-20"	18"	☐	$825
NPCB1820	18"-20"	20"	☐	$825
NPCB2020	20"-22"	20"	☐	$825
NPCB2216	22"-24"	16"	☐	$860
NPCB2218	22"-24"	18"	☐	$860
NPCB2220	22"-24"	20"	☐	$860

ITEM	WIDTH X DEPTH	$	QTY
Replacement Cover & Foam	NPCC __ __ __ __	130	

PLEASE NOTE: Each back will fit widths up to 2" wider.

BACK SUPPORT ACCESSORIES

MODEL #	DESCRIPTION	FITS BACK WIDTH	$	QTY
Custom - Cover	Optional Infection Control Wipe Down Back Support Cover	Specify back model # when ordering	205	
NIB-1938	Extra Small Privacy Flap for 11" - 13" wide back supports	11" - 13" (27.9 - 33.0)	70	
NIB-1078	Small Privacy Flap for 14"-16" wide back supports	14" - 16" (35.6-40.6 cm)	70	
NIB-1079	Medium Flap for 17"-19" wide back supports	17" - 19" (43.2-48.3 cm)	70	
NIB-1080	Large Privacy Flap for 20"-22" wide back supports	20" - 22" (50.8-55.9 cm)	70	
NIB-1081	Extra Large Privacy Flap for 23" - 26" wide back supports	23" - 26" (58.4 - 66.0 cm)	70	

MultiFit™ HEAD SUPPORT – MULTI-ADJUSTABLE PADS

MODEL # NIB-0784	✓	$
10" x 5" Large Rectangular	☐	$205

MODEL # NIB-0818	✓	$
14" x 5" Extra-Large Rectangular	☐	$205

MultiFit™ HEAD SUPPORT – FIXTURES

MODEL # NIB-0747	✓	$
Multi-Axis Hardware	☐	$150

MODEL # NIB-0823	✓	$
Head Support Receiver Bracket	☐	$60

ALL PRICES QUOTED IN CDN. PRICES ARE SUBJECT TO CHANGE WITHOUT NOTICE.

For additional NXT models, sizes and hardware not shown, please refer to the complete NXT Seating Order Form at www.motioncomposites.com

FOLDING ON CHAIR – CDN ORDER FORM

EXTRA COVERS

Extra Outer smartx3D Cover

Extra Outer Incontinent Cover

ITEM	WIDTH X DEPTH	$	QTY
Extra Outer smartx3D Cover – For a cover up to 18" x 18"	__ __ x __ __	130	
Extra Outer smartx3D Cover – For a cover 18" x 20" and above	__ __ X __ __	150	
Extra Outer Incontinent Cover – For a cover up to 18" x 18"	__ __ X __ __	130	
Extra Outer Incontinent Cover – For a cover 18" x 20" and above	__ __ X __ __	150	

ALL PRICES QUOTED IN CDN. PRICES ARE SUBJECT TO CHANGE WITHOUT NOTICE.

For additional NXT models, sizes and hardware not shown, please refer to the complete NXT Seating Order Form at www.motioncomposites.com